BENQ PD2705U
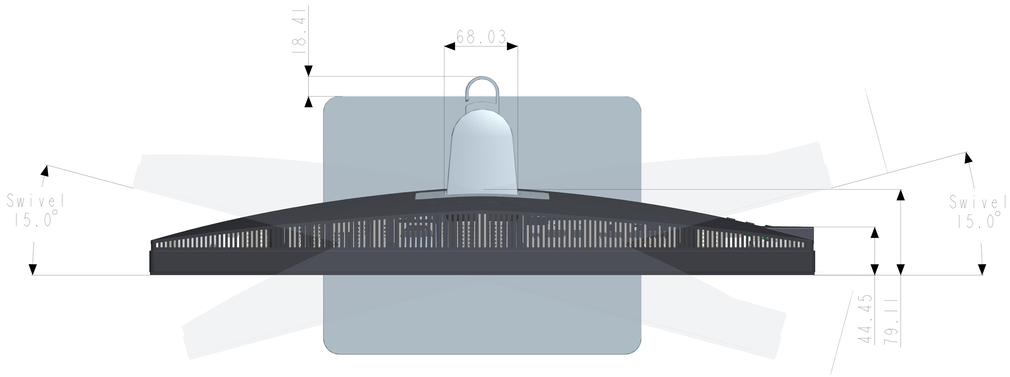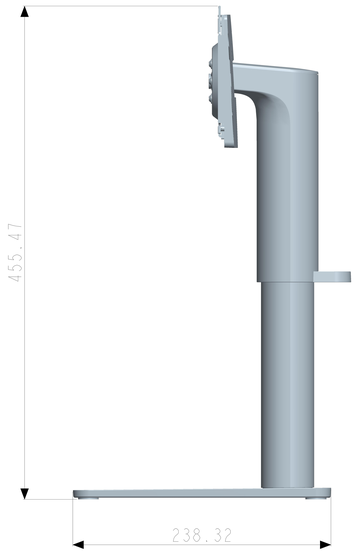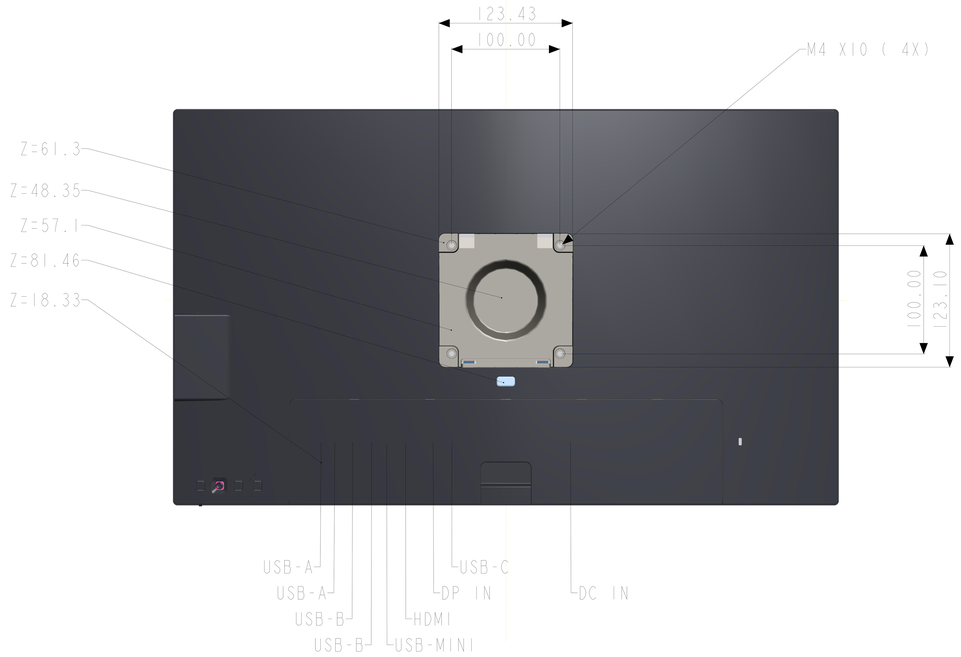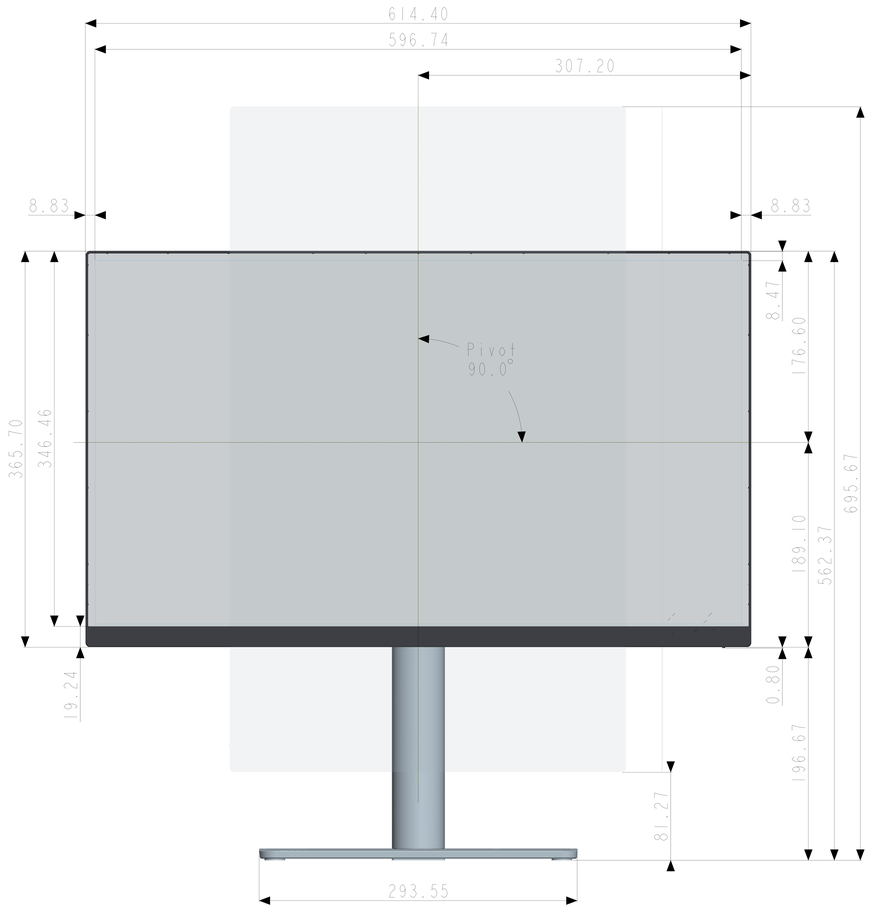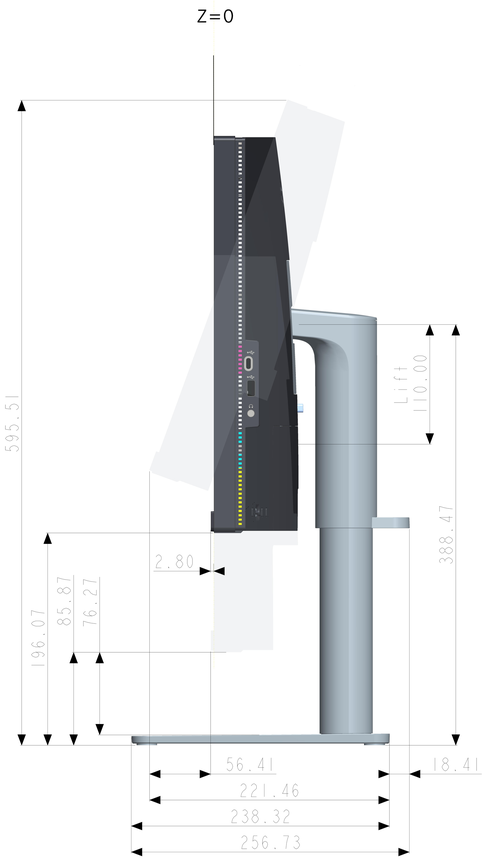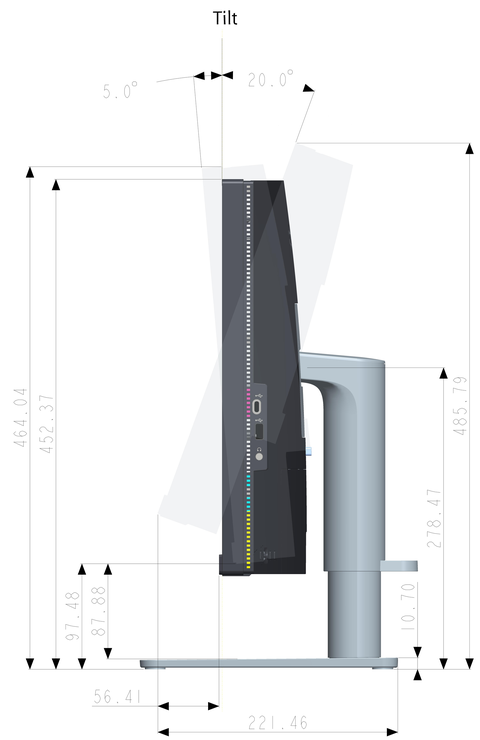
Unit : mm
Dimension : Normal
Drawing : Not to Scale